United States of America

Department of Transportation—Federal Aviation Administration

Supplemental Type Certificate

Number SA5137NM

This certificate, issued to **Rosen Sunvisor Systems**
86365 College View Road
Eugene, OR 97405

*certifies that the change in the type design for the following product with the limitations and conditions therefore as specified hereon meets the airworthiness requirements of Part * of the * Regulations.*

Original Product—Type Certificate Number: *See attached FAA Approved Model List (AML)
Make: No. SA5137NM for a list of approved airplane.
Model: models and applicable airworthiness regulations

Description of the Type Design Change: Installation of sun visor in accordance with ROSEN Product Development, Inc. Drawing List No. RCS-300 / 400-00 DL, Revision B, dated February 14, 2005, or later FAA-approved revisions.

Limitations and Conditions: Approval of this change in type design applies to the above aircraft model only and should not be extended to other aircraft of this model on which other previously approved modifications are incorporated unless it is determined that the relationship between this change and any of those other previously approved modifications will introduce no adverse effect upon the airworthiness of that aircraft. A copy of this Certificate and FAA Approved Model List (AML) No. SA5137NM, dated February 22, 2005, or later FAA approved revision, must be maintained as part of the permanent records for the modified aircraft.

If the holder agrees to permit another person to use this certificate to alter the product, the holder shall give the other person written evidence of that permission.

This certificate and the supporting data which is the basis for approval shall remain in effect until surrendered, suspended, revoked, or a termination date is otherwise established by the Administrator of the Federal Aviation Administration.

Date of application: December 17, 1990
Date of issuance: May 2, 1991

Date reissued: Febuary 22, 2005
Date amended: September 5, 2002; June 26, 2003; February 22, 2005

By direction of the Administrator

Don M Anderson
(Signature)
Acting Manager, Seattle Aircraft Certification Office

(Title)

Any alteration of this certificate is punishable by a fine of not exceeding $1,000, or imprisonment not exceeding 3 years, or both.

This certificate may be transferred in accordance with FAR 21.47.

FAA Form 8110-2(10-68)

FAA APPROVED MODEL LIST (AML) SA5137SE
FOR
INSTALLATION OF ROSEN SUNVISOR SYSTEMS COCKPIT SUN VISOR

ISSUE DATE: May 2, 1991

ITEM	AIRPLANE MAKE	AIRPLANE MODEL	TYPE CERTIFICATE NUMBER	CERTIFICATION BASIS FOR ALTERATION	FAA APPROVED DRAWING LIST		AML AMENDED DATE
					NUMBER	REVISION NO. AND DATE	
1.	Cessna	T303	A34CE	14 CFR part 23	RCS-300/ 400-00 DL	B 02/14/05	2/22/05
2.	Cessna	310, 310A, 310B, 310C, 310D, 310E, 310F, 310G, 310H, E310H, 310I, 310J, 310J-1, E310J, 310K, 310L, 310N, 310P, T310P, 310Q, T310Q, 310R, T310R	3A10	CAR 3	RCS-300/ 400-00 DL	B 02/14/05	2/22/05
3.	Cessna	320, 320-1, 320A, 320B, 320C, 320D, 320E, 320F, 335, 340, 340A	3A25	CAR 3	RCS-300/ 400-00 DL	B 02/14/05	2/22/05
4.	Cessna	336	A2CE	CAR 3	RCS-300/ 400-00 DL	B 02/14/05	2/22/05
5.	Cessna	401, 401A, 401B, 402, 402A, 402B, 402C, 411, 411A, 414, 414A, 421, 421A, 421B, 421C, 425	A7CE	CAR 3	RCS-300/ 400-00 DL	B 02/14/05	2/22/05
6.	Cessna	404. 406	A25CE	14 CFR part 23	RCS-300/ 400-00 DL	B 02/14/05	2/22/05
7.	Cessna	441	A28CE	14 CFR part 23	RCS-300/ 400-00 DL	B 02/14/05	2/22/05

FAA APPROVED: Don M Anderson
Acting Manager, Seattle Aircraft
Certification Office

REISSUED: February 22, 2005
AMENDED: September 22, 2003; March 22, 2003; February 22, 2005

FAA APPROVED MODEL LIST (AML) SA5137SE
FOR
INSTALLATION OF ROSEN SUNVISOR SYSTEMS COCKPIT SUN VISOR

ISSUE DATE: May 2, 1991

ITEM	AIRPLANE MAKE	AIRPLANE MODEL	TYPE CERTIFICATE NUMBER	CERTIFICATION BASIS FOR ALTERATION	FAA APPROVED DRAWING LIST		AML AMENDED DATE
					NUMBER	REVISION NO. AND DATE	

U.S. Department
of Transportation
**Federal Aviation
Administration**

**Transport Airplane Directorate
Aircraft Certification Service**

1601 Lind Avenue S.W.
Renton, Washington 98055-4056

FEB 22 2005

In Reply
Refer To: 150S-05-83

Mr. Gary Hanson
Rosen Sunvisor Systems, LLC
86365 College View Road
Eugene, Oregon 97405

Dear Mr. Hanson:

This letter is provided in response to your letter, dated January 24, 2005, requesting an update to Supplemental Type Certificate (STC) SA5137NM. The reason for the update is to change the document format for the Drawing List (DL) RCS-300/400-00 DL Revision B, dated February 14, 2005, and to update the component, assembly and installation documents. Also, the Approved Model List (AML) for STC SA5137NM Item 7 was found to have a minor typographical error. The AML referenced the Model '401' in Item 7 instead of '411.' The STC and AML have since been revised to add the new DL and correct the model error and are enclosed with this letter.

Sincerely,

Dorr M. Anderson
Manager, Cabin Safety and
Environmental Systems Branch
Seattle Aircraft Certification Office

Enclosure

SUPPLEMENTAL TYPE CERTIFICATE

10084369

This Certificate/Approval is issued by EASA, acting in accordance with Regulation (EU) 2018/1139 on behalf of the European Union, its Member States and of the European third countries that participate in the activities of EASA under Article 129 of that Regulation and in accordance with Commission Regulation (EU) No. 748/2012 to

ROSEN SUNVISOR SYSTEMS L.L.C.

86365 COLLEGE VIEW ROAD
EUGENE OR 97405
UNITED STATES OF AMERICA

and certifies that the change in the type design for the product listed below with the limitations and conditions specified meets the applicable Type Certification Basis and, if applicable, environmental protection requirements when operated within the conditions and limitations specified below:

Type Certificate Number: (AML) SA5137SE,
DATED 22 FEBRUARY 2005.
FAA APPROVED MODEL LIST

Type Certificate Holder: See FAA AML

Type: See FAA AML

Model: See FAA AML

Original STC Number: FAA STC SA5137NM

Description of Design Change:
Installation of sun visor

EASA Certification Basis:
The Certification Basis for the original product remains applicable to this certificate/approval.
The requirements for environmental protection and the associated certified noise and/ or emissions levels of the product are unchanged and remain applicable to this certificate/approval.

Associated Technical Documentation:
ROSEN Product Development, Inc. Drawing List No. RCS-300 /400-00 DL, Revision 8, dated 14 February 2005,

See Continuation Sheet(s)

For the European Union Aviation Safety Agency

Cologne, Germany, 26 April 2024

Marco CAPACCIO
Section Manager
Small Aircraft, Balloons & Airships

© European Union Aviation Safety Agency. All rights reserved. ISO9001 Certified.

or later revisions of the above listed document(s) approved/accepted on behalf of EASA in accordance with the Technical Implementation Procedures of EU/ USA Bilateral Agreement.

Limitations/Conditions:

Prior to installation of this change/repair it must be determined that the interrelationship between this change/repair and any other previously installed change and/ or repair will introduce no adverse effect upon the airworthiness of the product.

- End -

© European Union Aviation Safety Agency. All rights reserved. ISO9001 Certified.

Date	Revision	Approved
2/20/24	M	SYS

Cessna 300 and 400 Series Aircraft

Drawing List

FAA STC SA5137NM **RCS-300/400-00 DL** **Doc. # 9050-0118-003**

Drawing	Reference	Description	Rev.
A34CE (Cessna T303)	(RC303-300-1)		
1182100		**Complete Assembly**	**F**
1180302		Lens	C
1182101		Back Plate	A
1182102		Mounting Bracket	A
1010000-5		Complete Slide Assembly	G
1010001-5		Female Slide	M
1010002-3		Male Slide	U
1010003		Lens Strip	H
1020100-001		Assembly, Mod Block NSA	F
1020002-001		Mod Block A	P
1020003-001		Modified ‘B’ Block Standard	V
1160102-1		Bonanza Style Swivel	J
9051-0118-014		Installation Instructions for Cessna 303 Sunvisor System	D

Continued..

Drawing	Reference	Description	Rev.
3A10, A2CE, A7CE, A25CE, A28CE (Cessna 310-400 Series Aircraft)	(RC300/400-300-1) (RCS-300-6)		
1180000-006		**Complete Assembly**	**F**
1180400-011		Assembly, Side, Pilot's	H
1180400-012		Assembly, Side, Co-Pilot's	H
1180100-010		Mounting Assembly	D
1180109		Mounting Bracket	J
1160102-1		Bonanza Style Swivel	J
1020100-001		Assembly, Mod Block NSA	F
1020002-001		Mod Block A	P
1020003-001		Modified 'B' Block Standard	V
1010000-5		Complete Slide Assembly	G
1010001-5		Female Slide	M
1010002-3		Male Slide	U
1010003		Lens Strip	H
1180301-002		Lens	G
9051-0118-015		Installation Instructions for Cessna 310-400 Series Sunvisor System	D

Continued..

Drawing	Reference	Description	Rev.
3A25 (Cessna 320 Series)	(RC320-300-1)		
1182200		**Complete Assembly**	**G**
1182201		Swivel Stud	A
1182202		Angle Washer	A
1020100-001		Assembly, Mod Block NSA	F
1020002-001		Mod Block A	P
1020003-001		Modified 'B' Block Standard	V
1010000-5		Complete Slide Assembly	G
1010001-5		Female Slide	M
1010002-3		Male Slide	U
1010003		Lens Strip	H
1160401-002		Lens	L
9051-0118-016		Installation Instructions for Cessna 320 Series Sunvisor System	E

Continued..

Drawing	Reference	Description	Rev.
A7CE (Cessna 414A and 421B only)	(R1181300-0)		
1181300		**Complete Assembly**	**F**
1181201		421B Swivel	C
1020100-001		Assembly, Mod Block NSA	F
1020002-001		Mod Block A	P
1020003-001		Modified 'B' Block Standard	V
1010000-5		Complete Slide Assembly	G
1010001-5		Female Slide	M
1010002-3		Male Slide	U
1010003		Lens Strip	H
1180301-002		Lens	G
9051-0118-022		Installation Instructions for Cessna 414A, 421B Series Sunvisor System	E
	Kits		
R1160102-1		**Bonanza Style Swivel Kit**	
1160102-1		Bonanza Style Swivel	J
		Magnalube	
R1010000-KIT-5		**Universal Slide with Lens Strip Kit**	A
1010000-5		Complete Slide Assembly	G
1010003		Lens Strip	H
MS24693-C48BP		#8-32 X .375 Flat Head Phillips SS Black Patch Screw	
R1181201		**Cessna 421B Swivel Kit**	
1181201		421B Swivel	C
43-SPP		7/16 E-clip	
R1180302		**T303 Lens Kit**	**C**
R1180301-002		**310-400 Series Lens Kit**	**G**
R1160401-002		**320 Lens Kit**	**L**

Cessna 320 NSA Sunvisor System

Rosen Kit Number R1182200-0, RC320-300-1

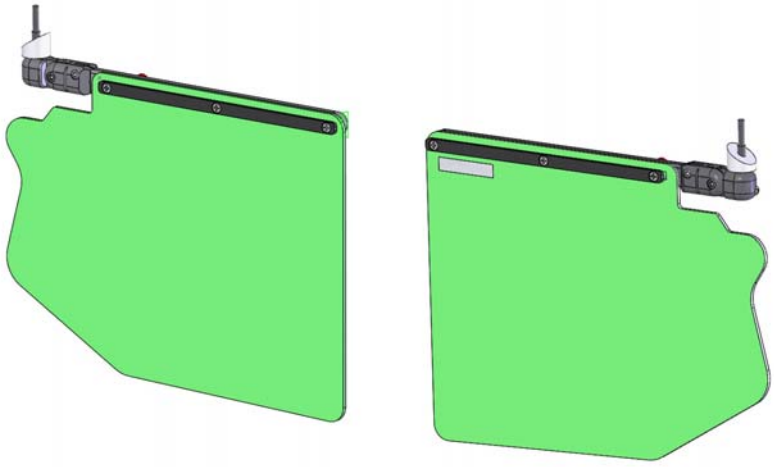

Component Maintenance Manual with Illustrated Parts List and Instructions for Continued Airworthiness

Manual Number Rosen 9051-0118-016 Revision E

March 31, 2015

Rosen Sunvisor Systems LLC
86365 College View Road
Eugene, Oregon 97405 USA

Company Proprietary Information. This document may not be disclosed without the permission of RSS

Rosen Sunvisor Systems CMM / IPC for Sunvisor Assembly
(p/n R1182200)

This ICA must be followed when the R1182200-0 sunvisor system is installed in accordance with Supplemental Type Certificate, (STC) No. SA5137NM, dated May 2, 1991, amended February 22, 2005.

The information contained in this document supplements or supersedes the basic manual only in those areas listed herein. For limitations, procedures, and performance information not contained in this manual, consult the basic aircraft ICA or Maintenance Manual.

STATEMENT OF Rev D CERTIFICATION
This manual complies with Federal Aviation Association (FAA) Airworthiness Requirements Part 23.
FAA Acceptance: Richard B. Thurst (ANM-100D) Date: 7/29/15.
The above certification does not apply to revisions or amendments made after the date of initial certification by other Approved Organizations. Revisions or amendments made by other Approved Organizations must be separately certified and recorded on separate record sheets

Record of Revisions

Rev	Description	Date	Approved
E	Update to CMM/IPC format. Correct typos	3/31/15	GH

Table of Contents

Record of Revisions 3
Introduction 4
General 4
Revision Service 4
Fault Isolation 5
Product Description 6
Installation Instructions 6
Removal 7
Weight and Balance 7
Repair 7
Instructions for Continued Airworthiness 8
Airworthiness Limitations 8
Illustrations 9-10
Parts List 11

Company Proprietary Information. This document may not be disclosed without the permission of RSS

Introduction

1. General

a. This Rosen Component Maintenance Manual provides use, maintenance and supplemental airworthiness instructions for the cockpit sunvisor system used on the following Cessna aircraft models: 320, 320-1, 320A, 320B, 320C, 320D, 320E, 320F.

b. Rosen reserves the right to revise this document for changed procedures, improved parts or changes to the system or components.

c. All technical support, spare sales, repairs or modifications are to be directed directly to Rosen Sunvisor Systems LLC. RSS must be contacted for future revision of this document as it is possible this does not contain the latest revisions.

2. Revision Service

Current revision status and revisions to this document may be obtained from Rosen Sunvisor Systems' website: www.rosenvisor.com. We recommend that you periodically check to make sure you are using the most current version.

Company Proprietary Information. This document may not be disclosed without the permission of RSS

Fault Isolation

1. General

a. This section identifies Probable Causes and Corrections for possible faults.

Problem	Probable Cause	Corrective Action
Visor does not extend on arm	Tension Thumb knob too tight	Loosen knob and slide using knob
Lens does not rotate smoothly on vertical axis	Vertical pivot tension incorrectly set	Re-tension vertical pivot
Lens does not rotate smoothly on horizontal axis	Horizontal pivot tension incorrectly set	Re-tension horizontal pivot

Company Proprietary Information. This document may not be disclosed without the permission of RSS

Product Description

General

a. The Rosen Sunvisor System consists of two visor assemblies which have been designed to improve pilot comfort during standard cockpit operations. The visor assemblies are fastened to the airframe in the same mounting positions as the factory installed visors.

Installation Instructions

This is an FAA STC'd installation requiring a log book entry upon completion.

Installation should take approximately 1 hour.

Please read these short instructions **COMPLETELY** before starting.

Tools Required (not included):

5/16 Wrench
Socket

Installation Hardware (included):

Qty:			
	(2)	1182201	Swivel Stud
	(2)	1182202	Angle Washer
	(2)	1428LNSS	1/4-28 Locking Nut
	(2)	MS16995-27B	8-32X5/8 Socket Head Cap Screw
	(4)	8HCLW	#8 High Collar Washer
	(1)	5/32 Hex Key	
	(1)	9/64 Hex Key	

Remove the original sunvisors from your Cessna 320. This will reveal a #10-32 hard mounting point in the aircraft.

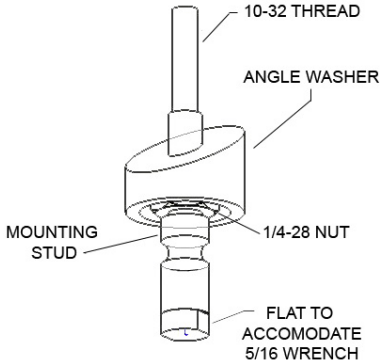

- Run the 1/4-28 locking nut completely onto the threaded mounting stud provided. Slide the angle washer onto the stud as shown.
- Thread the #10-32 threaded portion of the mounting stud into the hard point in the airframe. Use a 5/16 wrench on the flats provided on the mounting stud. Be careful not to burr or damage the stainless steel diameter on the mount as it will score the inside of the clamping mechanism.
- After the stud has been secured in place, use a deep socket to tighten the 1/4-28 locking nut, making sure the angle washer fits the contour of the overhead trim. When tightened, the locking nut and trim adapter should lock the mounting stud in place to prevent rotation when the

Company Proprietary Information. This document may not be disclosed without the permission of RSS

visor is turned. When tightened, the distance from the trim adapter to the bottom of the mounting stud is .925", which allows for .050" clearance between the visor clamping mechanism and the trim adapter. If necessary, loosen the 1/4-28 locking nut and screw the stud in or out using the 5/16 flats, and retighten.

- Lubricate the clamp and stud, then mount the sunvisor assembly onto the stud and secure with the #8-32 screw and lock washer provided. Tension the screw to provide proper resistance to motion.
- Repeat this procedure for the opposite side of the aircraft.
- Installation is now complete.
- Visors will stow in different positions, but generally the system will stow overhead when in the forward position.

Removal

a. Reverse installation procedure.

Weight and Balance

Because operators calculate Weight and Balance differently the actual station number must be determined by the installer's calculations.

With the visor located in the forward use position this system adds 2.04 lbs. located at the mount point of the visor. When the original visors are removed they must be weighed and removed from the calculation.

Repair

General

a. All components that do not meet the requirements for continued use must be replaced.

Company Proprietary Information. This document may not be disclosed without the permission of RSS

Rosen Sunvisor Systems CMM / IPC for Sunvisor Assembly (p/n R1182200)

Instructions for Continued Airworthiness

- **(On the ground only)**
  - Periodically clean the lenses with a soft cloth, mild soap and water or Rosen Cleaner, Polisher and Protectant. Do not use abrasives on the lens.
  - Periodically adjust the pivot tensions on the visor assemblies.
  - Periodically clean slide with a no residue alcohol based cleaner and inspect for wear and damage.

Airworthiness Limitations

The Airworthiness Limitations Section is FAA approved and specifies maintenance required under §43.16 and §91.403 of the Federal Aviation Regulations unless an alternative program has been FAA approved.

There are no airworthiness limitations associated with this installation.

Approved By Richard R Thomas
ASE, Denver ACO

Date of Approval 7/29/2015

Company Proprietary Information. This document may not be disclosed without the permission of RSS

Illustrations

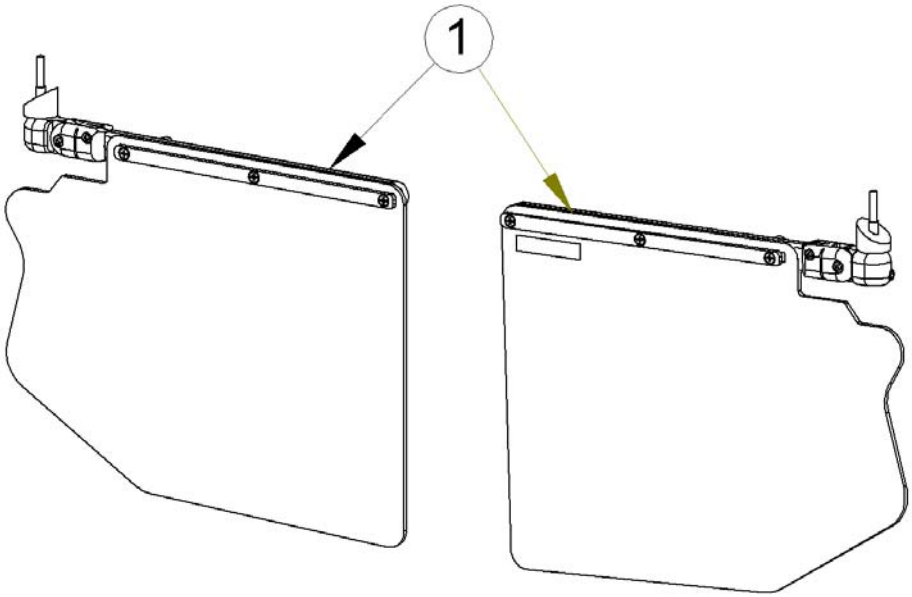

Fig 1

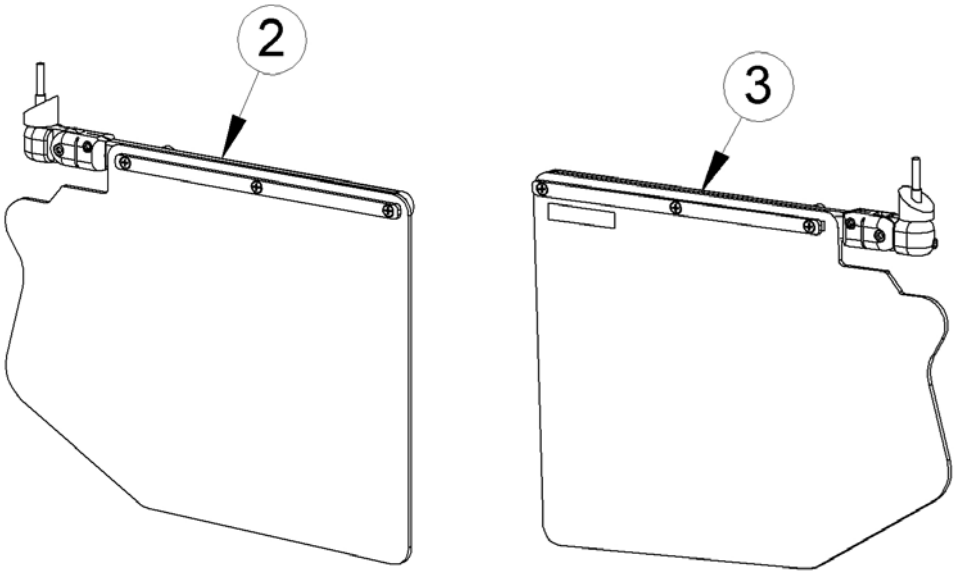

Fig 2

Pilot side Copilot Side

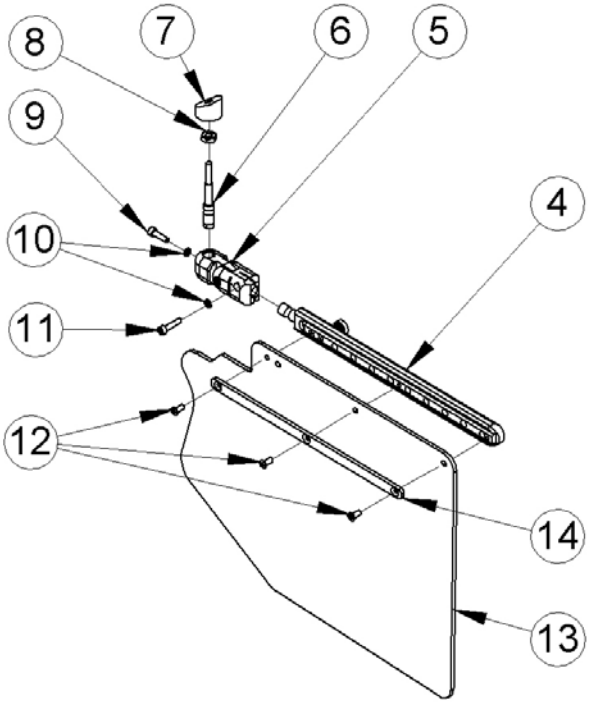

Fig 3

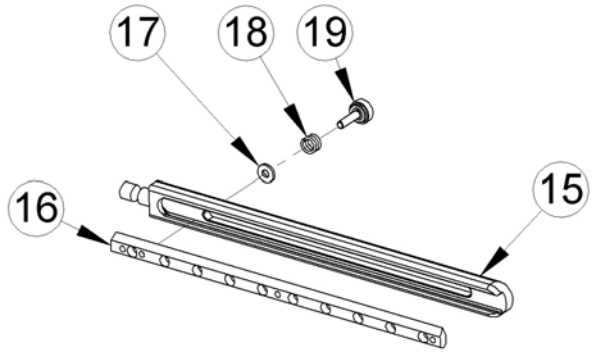

Fig 4

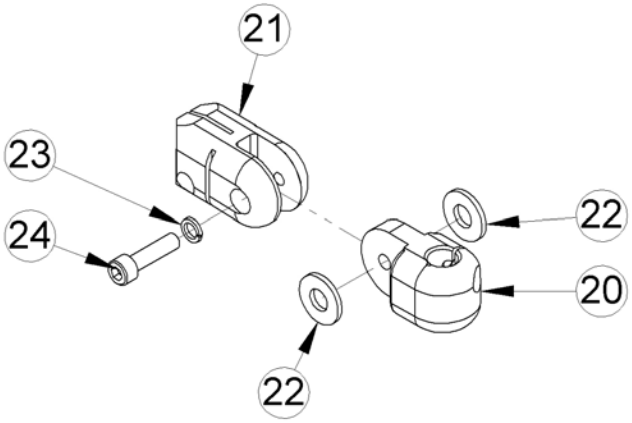

Fig 5

Company Proprietary Information. This document may not be disclosed without the permission of RSS

Rosen Sunvisor Systems CMM / IPC for Sunvisor Assembly (p/n R1182200)

Part List

Fig. No	Fig. Item	Part Number	Description	Reference	Eff	QTY
1	1	R1182200-0	Complete System, both sides	RC320-300-1		System
2	2	R1182200-1	Pilot Side Assembly	RC320-300-1L		1
2	3	R1182200-2	Copilot Side Assembly	RC320-300-1R		1
3	4	1010000-5	Slide Assembly			2
3	5	1020100-001	Assembly, Mod Block NSA			2
3	6	1182201	Swivel Stud			2
3	7	1182202	Angle Washer			2
3	8	1428 LNSS	Nut 1/4-28 Locking SS			2
3	9	MS16995-27B	Screw #8-32 X .625 HEX SHCS SST BLK			2
3	10	8HCLW	Washer #8 High Collar Lock			4
3	11	MS16995-28B	Screw #8-32 X .75 HEX SHCS SST BLK			2
3	12	MS24693-C48BP	Screw #8-32 X .375 Phillips Flathead 100 (Black Patch)			6
3	13	1160401-002	Lens			2
3	14	1010003	Lens Strip			2
4	15	1010001-5	Female Slide-Universal			2
4	16	1010002-3	Male Slide-Universal			2
4	17	90295A110	Nylon Washer .06 X .405 OD-.175 ID			2
4	18	B-19679	Compression Spring (Red Knob)			2
4	19	99-701	Ø1/2 Knurled Red Knob #8-32 X 7.5			2
5	20	1020003-001	Mod Block B			2
5	21	1020002-001	Mod Block A			2
5	22	2801-0010	Washer SS (5710-61-30 Seastrom)			4
5	23	10HCLW	Washer #10 High Collar Lock			2
5	24	MS16996-12B	Screw #10-32 X .75 Hexagon Socket Cap			2

Company Proprietary Information. This document may not be disclosed without the permission of RSS